39-450
39-451, 39-452

S19-BIU/220/170

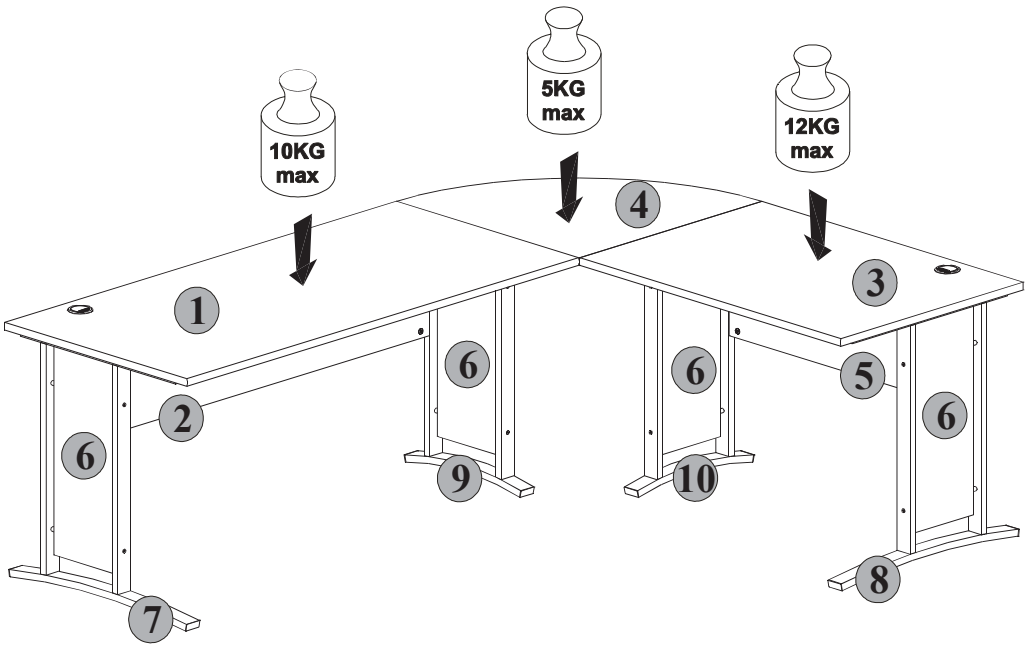

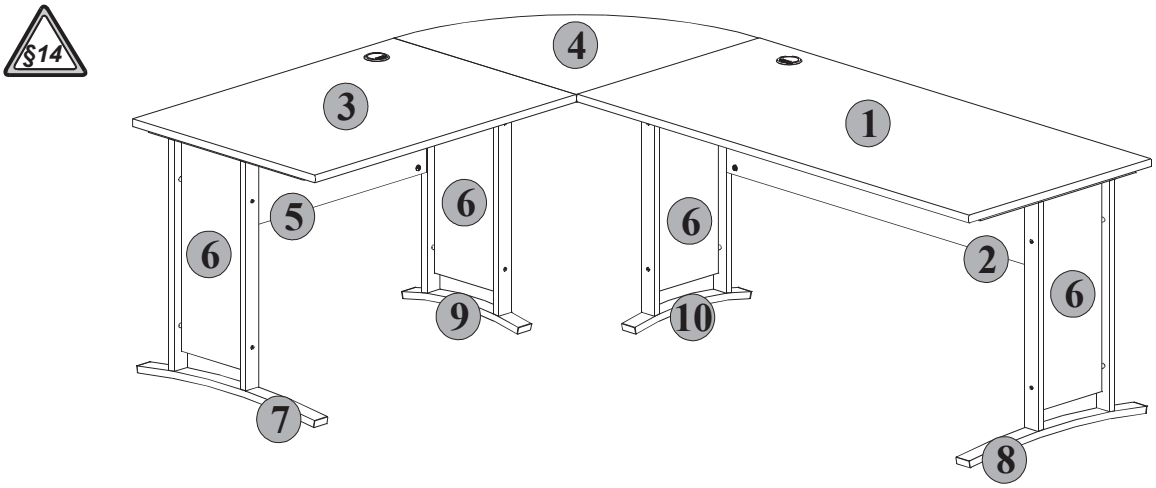

§1
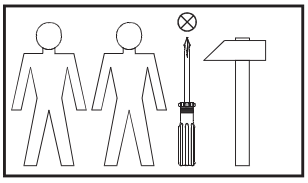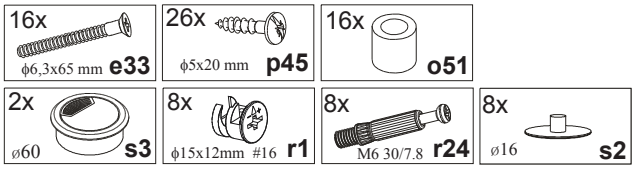
A	B	C	D
1	S19-2067/A	1500x700	5/7
2	S19-457/A	1418x320	5/7
3	S19-2068/A	1000x700	6/7
4	S19-2069	700x700	6/7
5	S19-458/A	918x320	6/7
6	S19-459	600x228	5/7;6/7
7	NZL/A	675x700	7/7
8	NZP/A	675x700	7/7
9	NW L/A	595x700	7/7
10	NW P/A	595x700	7/7