MONTAGEANLEITUNG

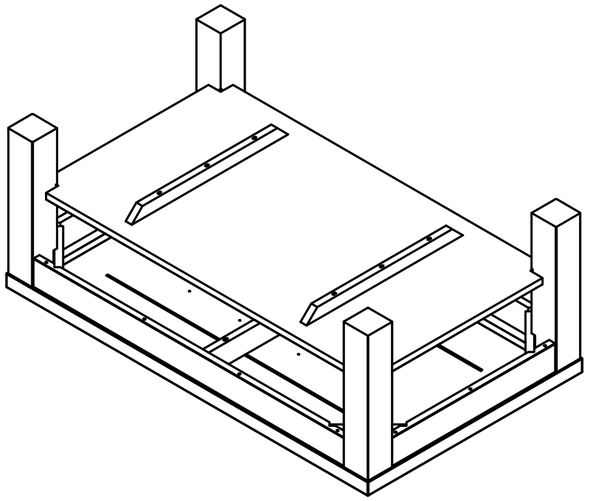

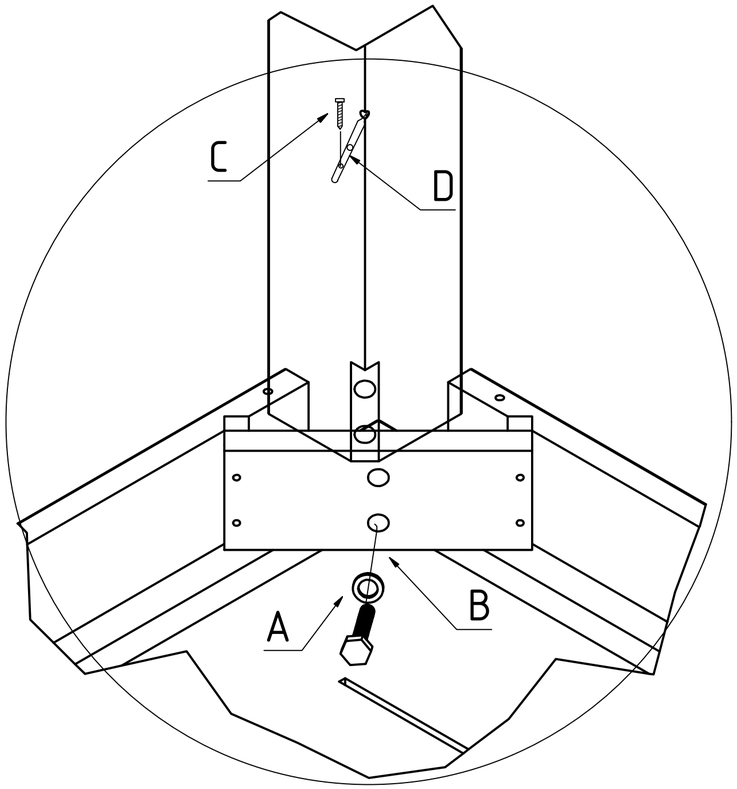

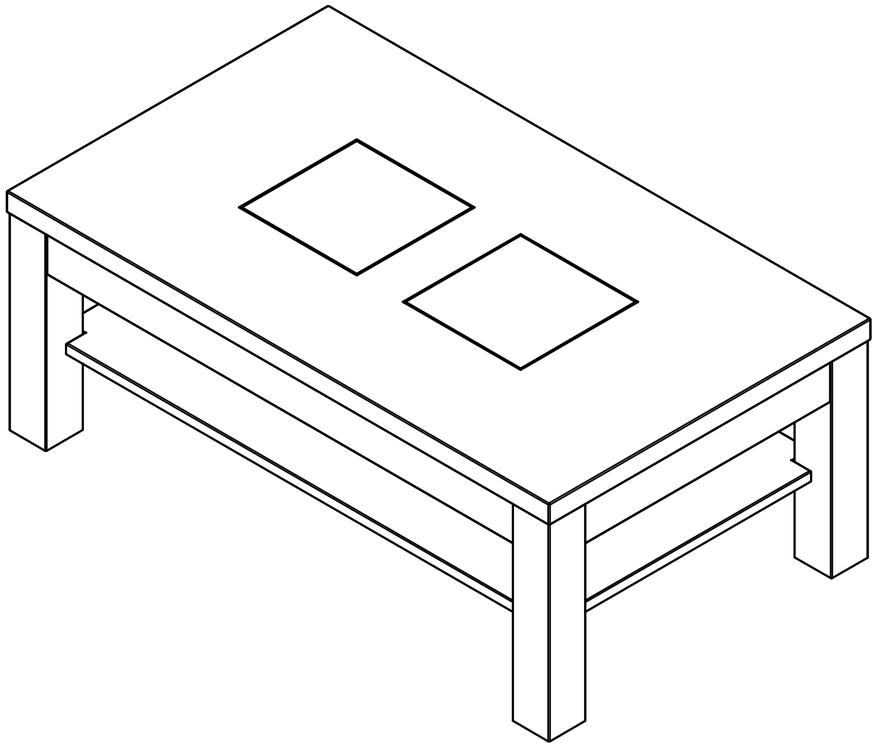

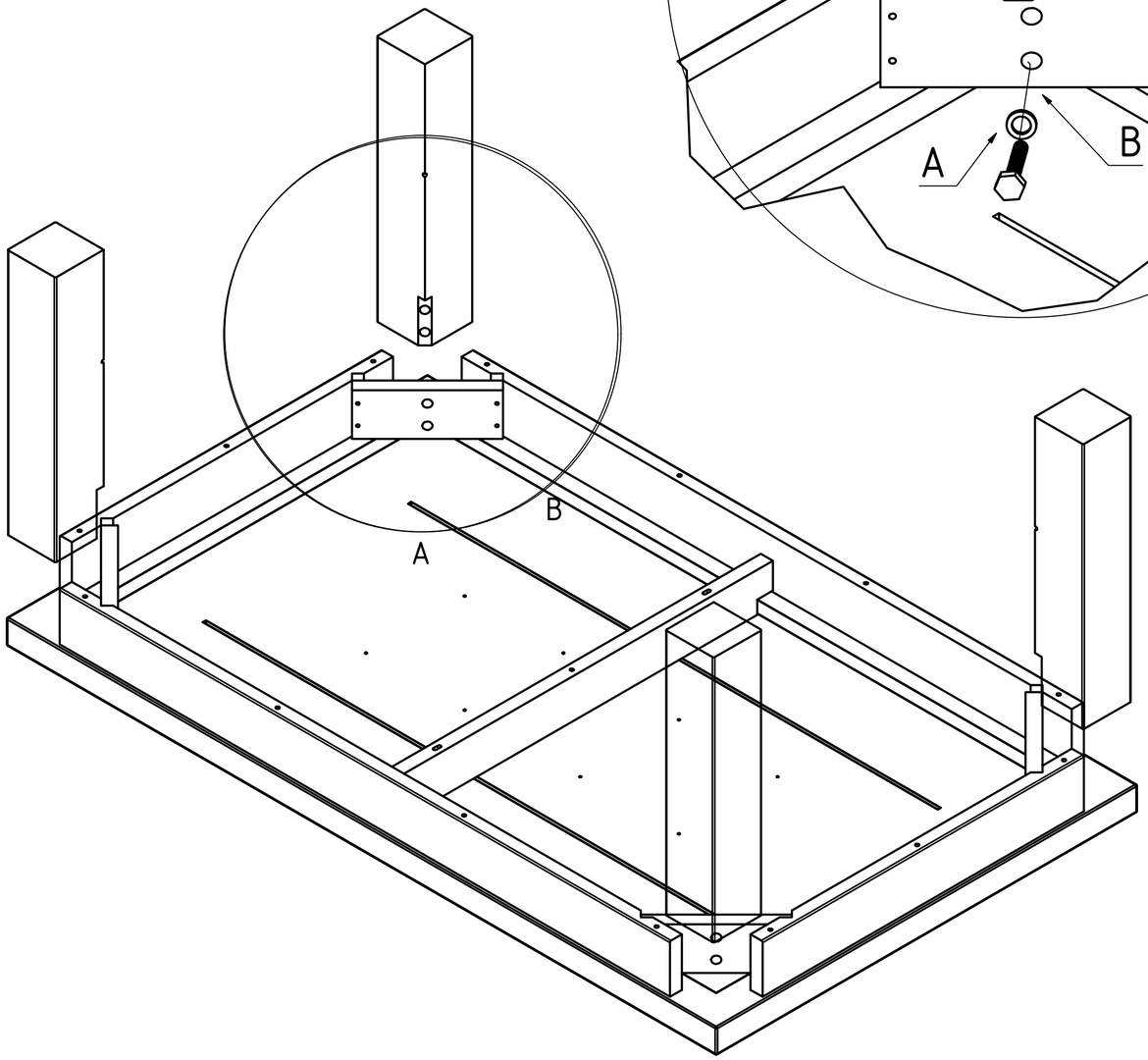

A		8 pcs
B		8 pcs
C		8 PCS
D		4 PCS

					Date	Name
				Drawn	11/08/2017	woodwork
				Checked		
				Standard		
State	Changes	Date	Name			

Masa 1180

1

A2